TUFF INDUSTRIES INC

TUFDEK | ECONODEK | TUFF-SHIELD

Tuff Industries Inc

9570 Bottom Wood Lake Rd.
Lake Country, BC V4V 1S7
Toll Free: 1-877-860-9333
Fax: 250-766-1366

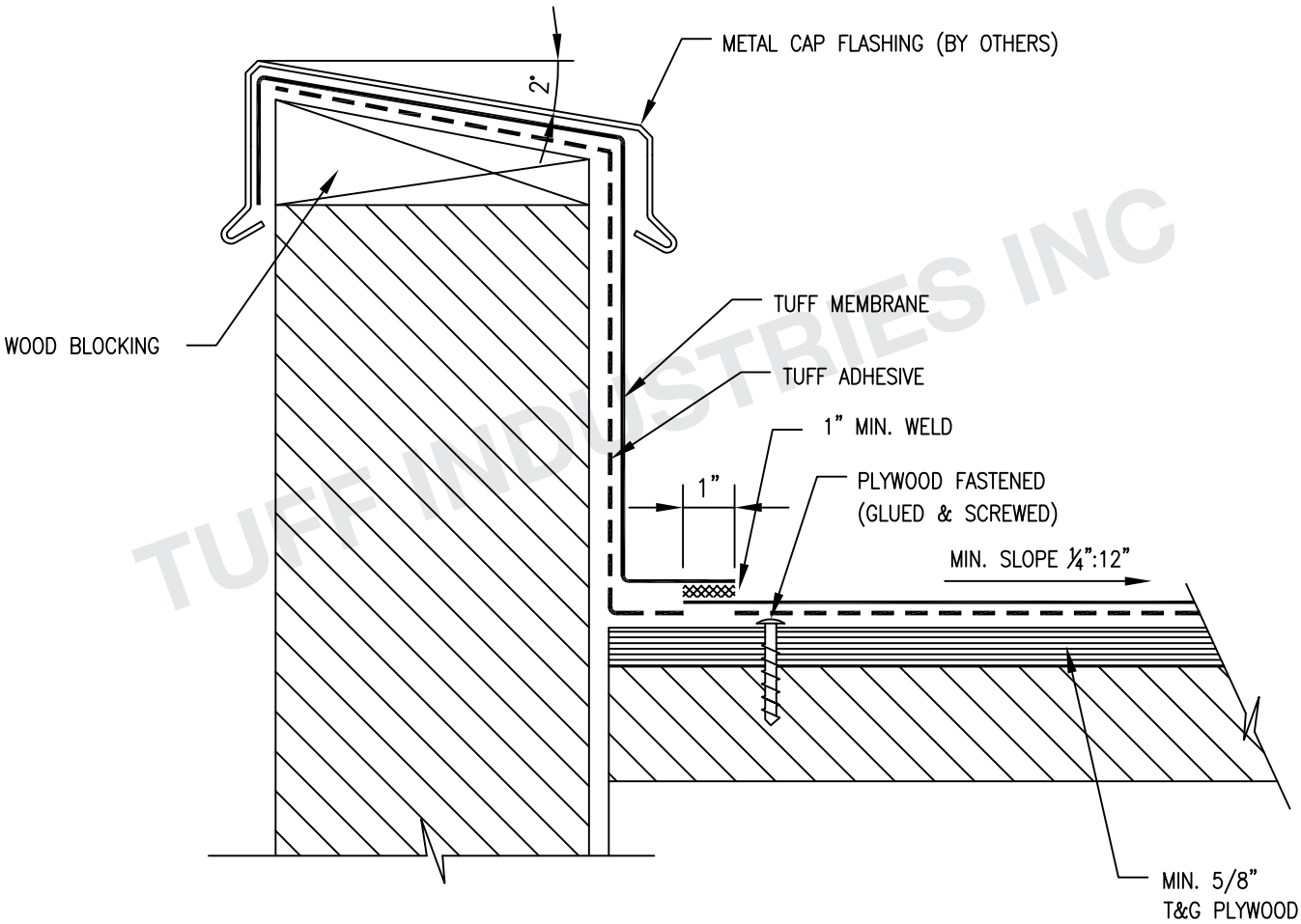

TUFF INDUSTRIES INC

NOTES:

1. INSTALLATION TO BE COMPLETED IN ACCORDANCE WITH MANUFACTURES SPECIFICATIONS.
2. DO NOT SCALE DRAWINGS.
3. MIN. SLOPE 1/4":12" AWAY FROM STRUCTURE.
4. PLYWOOD SUBSTRATES TO BE MIN. 5/8" T&G (3/4" RECOMMENDED) PLYWOOD JOINTS TO BE BLOCKED FROM BELOW.
5. AS A SUPPLIER OF MATERIALS ONLY, TUFF INDUSTRIES DOES NOT ASSUME RESPONSIBILITY FOR ERRORS IN DESIGN, ENGINEERING, QUANTITIES OR DIMENSIONS. THE ARCHITECT, CONTRACTORS OR OWNERS REPRESENTATIVE MUST VERIFY ALL DIMENSIONS, SIZES AND SUITABLITY OF DETAILS.
6. THIS DRAWING IS THE PROPERTY OF TUFF INDUSTRIES INC. AND MAY NOT BE REPRODUCED WITHOUT WRITTEN CONSENT. REPRESENTATIVE MUST VERIFY ALL DIMENSIONS, SIZES AND SUITABILITY OF DETAILS.
7. CONTRACTORS NOTE: FOR PRODUCT INFORMATION VISIT: www.tufdek.com / www.econodek.com / www.tuff-shield.com

TD-07

UPSTAND WALL WITH CAP FLASHING